INNOVATION TECHNOLOGY SOLUTION FOR ERECTION OF LARGE-SPAN COATINGS BY LIFTING MODULES

INOVAÇÃO EM SOLUÇÕES TECNOLÓGICAS PARA A CONSTRUÇÃO DE COBERTURAS DE GRANDES VÃOS POR MEIO DE MÓDULOS ELEVÁVEIS

ІННОВАЦІЙНЕ ТЕХНОЛОГІЧНЕ РІШЕННЯ ДЛЯ ЗВЕДЕННЯ ВЕЛИКОПРОЛІТНИХ ПОКРИТТІВ ЗА ДОПОМОГОЮ ПІДЙОМНИХ МОДУЛІВ

Hennadii Tonkacheiev
ORCID 0000-0002-6589-8822
Kyiv National University of Construction and Architecture
Kyiv, Ukraine
tonkacheiev.gm@knuba.edu.ua

Oleksandr Ignatenko
ORCID 0009-0009-7691-884X
Kyiv National University of Construction and Architecture
Kyiv, Ukraine
ignatenko.oo@knuba.edu.ua

Volodymyr Rashkivskyi
ORCID 0000-0002-5369-6676
Kyiv National University of Construction and Architecture
Kyiv, Ukraine
rashkivskyi.vp@knuba.edu.ua

Iryna Dubovyk
ORCID 0000-0001-7444-9159
Kyiv National University of Construction and Architecture
Kyiv, Ukraine
dubovyk.ir@knuba.edu.ua

Yuri Zaiets
ORCID 0000-0002-9711-042X
Kyiv National University of Construction and Architecture
Kyiv, Ukraine
yaroslava.bardashevska@pnu.edu.ua

Abstract. Based on the conducted analysis of the characteristics of known organizational and technological options for non-crane lifting, including the preliminary assembly of structural-technological coating blocks on low scaffolding using the pulling method with hydraulic lifting modules placed on the tops of design columns, or the pushing method, where the support beams are pushed to the design height resting on the tops of growing lifting column shafts with the growing unit located on the foundations, a new technology has been developed. This technology for large-span coatings erection uses mechanized process equipment in the form of lifting modules. According to this method, the vertical movement of the bearing beams of the large-span coating, pre-assembled into a structural-technological block on the foundations, is performed by pushing within the space between paired columns of the supporting frame, resting on the tops of the growing installation columns. The growing up of installation column sections occurs by alternately resting the column sections on the hydraulic jacks of the lifting modules, located in the intercolumn space on the foundations, and on the lifting latch beams fixed on the external surfaces of the paired columns. Vertical guiding profiles are fixed on the internal surfaces of the paired columns to function as deviation limiters for the column sections during the growing process. This approach reduces the amount of high-altitude assembly work to the operations of final securing of the coating beams at the design height between the tops of the paired columns of the supporting frame. It automates all processes of growing the installation column sections and moving the bearing beams of the coating from the foundation level to the column top level, reducing the overall number of construction and assembly operations, shortening the erection timelines for large-span coatings, and ensuring the complete execution of erection work within a tightly built site, with dimensions not exceeding the planned dimensions of the large-span coating being erected.

Keywords: Lifting modules, erection of coatings, mechanized process equipment, growing up of installation columns, pulling and pushing methods.

Resumo. Com base na análise realizada das características das opções organizacionais e tecnológicas conhecidas para elevação sem o uso de guindastes, incluindo a montagem preliminar de blocos estruturais e tecnológicos de revestimento em andaimes baixos utilizando o método de tração com módulos hidráulicos de elevação posicionados no topo das colunas de projeto, ou o método de empurrar, no qual as vigas de suporte são elevadas até a altura projetada apoiando-se no topo de colunas de elevação em crescimento com a unidade de crescimento localizada nas fundações, foi desenvolvida uma nova tecnologia. Essa tecnologia para montagem de revestimentos de grandes vãos utiliza equipamentos de processo mecanizados na forma de módulos de elevação. De acordo com esse método, o movimento vertical das vigas portantes do revestimento de grande vão, pré-montadas em um bloco estrutural-tecnológico nas fundações, é realizado por empurrão dentro do espaço entre colunas pareadas da estrutura de suporte, apoiando-se no topo das colunas de instalação em crescimento. O crescimento das seções das colunas de instalação ocorre alternando o apoio das seções das colunas nos macacos hidráulicos dos módulos de elevação, localizados no espaço entre colunas sobre as fundações, e nas vigas de travamento fixadas nas superfícies externas das colunas pareadas. Perfis-guia verticais são fixados nas superfícies internas das colunas pareadas para funcionar como limitadores de desvio das seções das colunas durante o processo de crescimento. Essa abordagem reduz a quantidade de trabalho em altura às operações de fixação final das vigas de revestimento na altura projetada entre os topos das colunas pareadas da estrutura de suporte. Automatiza todos os processos de crescimento das seções das colunas de instalação e do movimento das vigas portantes do revestimento do nível da fundação ao topo das colunas, diminuindo o número geral de operações de construção e montagem, encurtando os prazos de montagem para revestimentos de grandes vãos e garantindo a execução completa do trabalho de montagem em um local restrito, cujas dimensões não excedem as do revestimento de grande vão em montagem.

Palavras-chave: módulos de elevação, montagem de revestimentos, equipamentos mecanizados, crescimento de colunas de instalação, métodos de tração e empurrar

Анотація. На основі аналізу характеристик відомих організаційно-технологічних варіантів безкранового підйому, що включає попередню збірку блоків конструктивно-технологічного покриття на низьких риштуваннях тяговим способом з розміщенням на вершинах проектних колон гідравлічних підйомних модулів, або метод штовхання, коли опорні балки висуваються на проектну висоту, спираючись на вершини шахт підйомної колони, що росте, з розташованим вузлом росту, розроблена нова технологія. Ця технологія зведення великопролітних покриттів використовує механізоване технологічне обладнання у вигляді підйомних модулів. Відповідно до цього способу вертикальне переміщення несучих балок великопрогонового покриття, попередньо зібраного в конструктивно-технологічний блок на фундаментах, здійснюється шляхом проштовхування в просторі між парними колонами несучої рами, що спирається на верхівки зростаючих установчих колон. Нарощення секцій колони установки відбувається шляхом почергового обпирання секцій колони на гідродомкрати підйомних модулів, розташованих в міжколонному просторі на фундаментах, і на балки підйомних засувок, закріплених на зовнішніх поверхнях спарених колон. На внутрішніх поверхнях спарених колон закріплені вертикальні напрямні профілі, які виконують роль обмежувачів відхилення секцій колони в процесі підрощування. Такий підхід зводить обсяг монтажних робіт на висоті до операцій остаточного закріплення балок покриття на проектній висоті між вершинами спарених колон несучого каркаса. Автоматизує всі процеси вирощування секцій монтажної колони та переміщення несучих балок покриття від рівня фундаменту до верхнього рівня колони, скорочуючи загальну кількість будівельно-монтажних операцій, зменшуючи терміни монтажу великопролітних покриттів, забезпечуючи повне виконання монтажних робіт в межах щільно забудованого майданчика, розміри якого не перевищують планових розмірів великопрогонового покриття, що зводиться.

Ключові слова: Підйомні модулі, монтаж покриттів, механізоване технологічне обладнання, підрощування монтажних колон, способи протягування та штовхання.

1. INTRODUCTION

The current state of erecting large-span structural-technological coating blocks involves two sequential technological stages. In the first stage, elements of the transverse supporting frame (foundation cups, columns, intercolumn beams, and ties) are installed using self-propelled boom cranes through a free-lifting method (Ibrahim, 2024). On low scaffolding (up to 2 meters high), the large-span coating blocks are assembled, the process equipment is installed, and the vapor, thermal, waterproofing, and finishing exterior roofing layers are formed (Chernenko & Sobko, 2016). In the second stage, the coating blocks, which are 100% structurally and operationally ready, are moved to the design height using a non-crane technology through either the pulling or pushing methods (Sobko & Novak, 2015).

During the vertical movement of the bearing beams of the coating by the pulling method, hydraulic pulling-type lifters are placed on the tops of the columns of the supporting frame. Cyclical pulling of sections of traction belts, which connect the coating beams to the traction lifters, is performed. The pushing method involves the bearing beams of the coating resting on the tops of the growing shafts of the lifters during vertical movement. Sectional growing of the lifter shafts is performed using hydraulic jacks located in the lifting conductors on the foundations.

Both non-cranes lifting options share common characteristics that affect the duration of the lifting work. These include labor-intensive and numerous manual assembly operations, frequent stops during the vertical movement of the coatings to install intermediate height platforms, multiple assemblies (disassembles) of interchangeable structural elements involved in the lifting process, and the complex and metal-intensive structures of the upper support platforms, lifter bodies, and support frames (Ignatenko & Glushchenko, 1992).

The development of mechanized process equipment in the form of lifting modules, which will reduce the number of high-altitude assembly operations and shorten the overall duration of lifting work, is a relevant area for optimizing the processes involved in the erection of large-span coatings.

2. THEORETICAL FRAMEWORK OR LITERATURE REVIEW

Famous local and international experts studied the peculiarities of the building of reinforced concrete and metal coatings using traditional crane and craneless technologies. In particular, the organizational and technological solutions for the installation of large-size industrial buildings and structures by free-lifting methods are described in detail in the works of V. Chernenko (Chernenko, 1982; Chernenko et al., 2011), Tonkacheiev & Rashkivskyi (Tonkacheiev et al, 2022; Tonkacheiev et al., 2023), Osypov (2020), K. Chernenko (2011), Sobko (2022), Bondar et al. (2022), Sobhanian et al. (2024).

The stages of consolidation and lifting of the coatings are reflected in the works of Engel (2007), Fligier (1977), Rühle (1989), Ziólko (1980), Yang (2023), Ruan (2023), modern variants of the pull-up method and the push-out method FAGOLI (2024), SARENS GROUP (2024), DLT Engineering (2011), MAMMOET (2021), ENERPAC (2022), ULTRACON (2022).

The processes of covering consolidation and lifting are described in detail in the scientific works of the cited authors, as well as in the presentation materials of modern lifting equipment manufacturers, but there is no algorithm for optimizing structural and technological solutions for erecting coverings using lifting modules.

3. METHODOLOGY

Considering the advantages and disadvantages of existing non-crane lifting methods for coatings, such as pulling up and pushing up (Sobko & Novak, 2022), the goal is to develop a

technological solution for the erection of large-span coatings using mechanized process equipment in the form of lifting modules. In this method, paired columns of the supporting frame are used as deviation limiters for the bearing beams of the coating during their vertical movement. Additionally, the beams rest on the tops of the growing installation columns as they are lifted.

The growing up of installation column sections is performed in the space between the paired columns of the supporting frame, with the load being alternately transferred from the growing column sections to the hydraulic jacks of the lifting modules. These jacks are located on foundations within the space between the paired frame columns and to the lifting latch beams fixed on the external surfaces of the paired frame columns.

The implementation of this technological solution is expected to optimize the lifting processes by reducing the volume of high-altitude assembly work, simplifying the structures of the mechanized lifting process equipment, and shortening the overall duration of the erection of large-span coatings.

4. RESULTS AND DISCUSSION

The research on the organizational and technological features of erecting metal coatings using non-crane methods was conducted on the example of industrial construction (Nazarenko et al., 1986). The technological processes used in the erection of coatings had common features. In each case, the first stage of assembly work involved constructing the coating structure on low scaffolding using cranes and the free-lifting method. In the next stage, the vertical movement of the large-span coating was carried out either by the pulling method or the pushing method.

Non-crane lifting technology of large-span coatings using the pulling method was employed in the workshop's construction at the aviation plant in Hostomel, Ukraine. Two roofing blocks (with a total area of 40,000 m², block dimensions of 96x48 m and 96x54 m, and block weights up to 1,200 tons) were lifted to a height of 34 m in 10 shifts. The support structures for the hydraulic pulling-type lifters were the columns of the supporting frame with intermediate platforms for the temporary resting of the coating block during its movement up to the design height.

The PSH-330 pulling-type hydraulic lifter consisted of two GD-170 hydraulic jacks (each with a lifting capacity of 170 tons and a working stroke length of 1120 mm), two safety screws, a sub-jack beam and an over-jack beam, and a solid-welded shuttle belt (12 m long), which was connected at the lower end to a traction belt (600x40 mm in cross-section). The traction belt was hinged to the beam of the raised coating (Tonkacheiev et al., 2023). The process of lifting the coating by the pulling method and the fixation unit of the raised coating beam are shown in Figure 1.

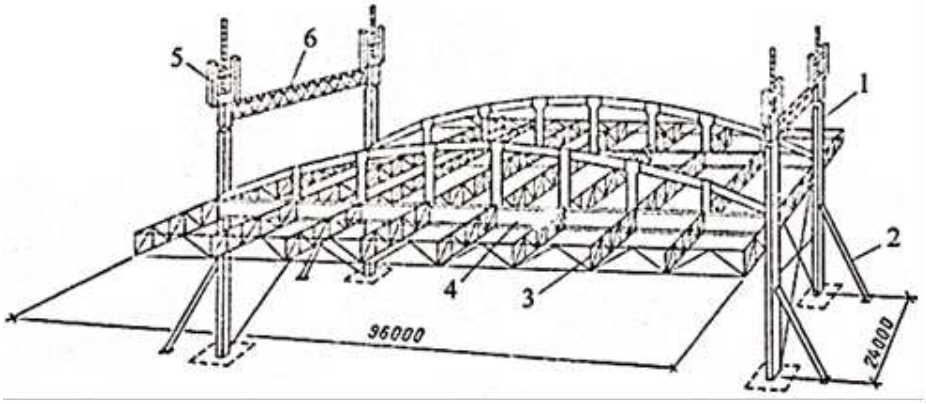

Figure 1. *The process of lifting the coating by the pulling method*: 1 – column, 2 – reinforcing struts, 3 – roof trusses, 4 – cross bar, 5 – pulling-up hydraulic lifter PSH – 330, 6 – wing farm.

The process of lifting each block consisted of six repetitive cycles. Each cycle included two sequential stages: lifting the coating block by 6 meters and temporarily resting the coating on the support platforms of the columns. In each lifting cycle, the coating was pulled upwards six times by 1 meter, corresponding to the stroke of the jack rods and the spacing of the holes in the traction belt. In the process of the coating lifting in the intercolumn space, elements of the grating were subjected to dismantling in a 6-meter section and then reassembled after the coating beam was lifted.

The drawbacks of this method include stoppages related to the intercolumn gratings dismantling prior to lifting the support beam of the coating, followed by reassembly of the gratings, the dismantling of 6-meter-long sections of the traction belts, and the temporary resting of the support beams of the coating on elevated support platforms after each 6-meter lift stage. This also involves installing intermediate height assembly platforms on the columns for the assembly and disassembly of the intercolumn gratings and the complex dismantling of the PSH-330 pulling-type hydraulic lifter at heights of 34-36 meters after completing the lifting work, requiring high-capacity boom cranes.

However, the benefits of this method include the formation of a rigid transverse frame from the support columns and intercolumn beams, and control of the horizontal position of the coating during lifting. This was achieved by moving the support beams of the coating block from the foundation level to the design height level within the space between paired columns.

A notable example of the pushing method, where the raised coating beams rest on the tops of the growing shafts of the lifters, is the erection of the 144 x 275-meter hangar coating at the aviation plant in Kyiv, Ukraine (Nazarenko et al, 1986). The 39,600 m² coating, weighing 1,100 tons, was lifted to a height of 24 meters in 12 shifts. The growing up of the lifter shafts was performed using PG-300 hydraulic lifters. An illustration of the pushing method with support on the tops of the growing shafts of the lifters is shown in Figure 2.

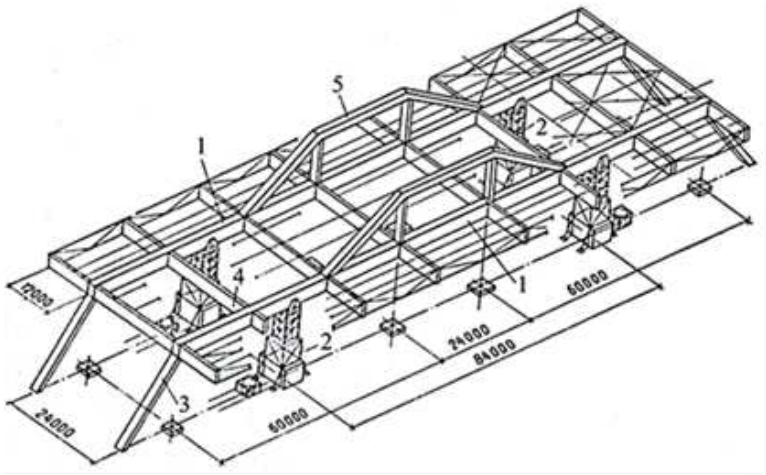

Figure 2. *The process of lifting the coating by the push-out method*: 1 – cross bar, 2 – hydraulic lifter PG-300, 3 – design column, 4 – frame, 5 – support system of Rigel

As growing up installation columns, sections of the lifter shafts were used, which were supplied into the growing up area between the bodies of the hydraulic lifters and the support frames. The coating beams rested on the tops of the growing lifter shafts. The solid design columns were attached to the lower surface of the coating support beams during the assembly of the large-span coating block on low scaffolding (height 2.0 m). As the lifter shafts were extended, the design columns shifted from an inclined position to a vertical one. In the final phase of growing the lifter shafts, the design columns were fixed in the foundation sockets. In

Br. J. Ed. Tech. Soc, v.17, n.se4, p.246-256, 2024
DOI http://dx.doi.org/10.14571/brajets.v17.nse4.246-256
ISSN 2316-9907

the next stage of assembly work, the load from the coating support beams was transferred to the tops of the design columns. After this, the lifter shafts and the hydraulic lifting module PG-300 were dismantled.

To finalize the positioning of the coating blocks at the design height, multiple "lift-lower" cycles were performed within height limits of 200-300 mm, constantly adjusting the joints of the individual coating blocks. The disadvantages of this technology included the complexity of positioning the coating blocks on the column tops and the significant labor intensity of the assembly processes at a height of 24 m, related to the joining of the raised coating block beams. The lifter shafts resting on the foundations are classed as "hinged". As a result, costly and metal-intensive procedures were designed to ensure that the sections of the installation columns moved vertically during their expansion.

For this aim, the installation column sections were built with 2.8 x 2.8 m plan dimensions, and the supporting vertical conductor of each hydraulic lifting unit, with a height of 10 m, had a lower frame contour of 16 x 16 m. Furthermore, the deployment of this technique necessitated the employment of large-scale safety equipment and a sophisticated system of jacks to manage the verticality of the coating lift. The suggested pushing method for lifting coatings has the benefit of eliminating the need for intermediate height assembly platforms during coating beams vertical movement from the level of foundation to the design height.

The whole lifting procedure was focused on the foundations. Workers were only involved at a height of 24 m during the last part of the coating erection process, specifically while connecting the tops of the design columns to the lower margins of the coating beams and linking the beams of the roofing structure blocks.

Given the benefits of pulling and pushing methods for erecting large-span coatings, a new technology based on lifting modules has been created. In frames of this method, paired columns of the load-bearing framework serve as guides for the vertical movement of coated beams that are pre-assembled on low scaffolding. The coating' vertical movement of is executed by the pushing method, with the coating beams resting on the tops of the growing installation columns. The tops and subsequent sections of the growing installation columns have cantilever support protrusions on both sides at the bottom. Lifting modules and lifting fixators make it easier to extend the installation columns.

The lifting modules are made up of hydraulic jacks mounted on foundations in the area between the paired columns, as well as support platforms connected to the hydraulic jack rods. The lifting fixators comprise cantilever support platforms secured to the outer sides of the paired columns, hydraulic cylinders located at the ends of the cantilever platforms, and movable beams. The rising parts of the installation columns move vertically between guiding profiles that are affixed to the inner surfaces of the paired framework columns. The pushing method for lifting the coating is a cyclical operation.

During each cycle, the height of the coating beams' movement inside the gap between the paired columns corresponds to the operating stroke length of the lifting module's hydraulic jack rods. The coating lift cycle phases, with support on the growing installation columns, are shown in Figure 3.

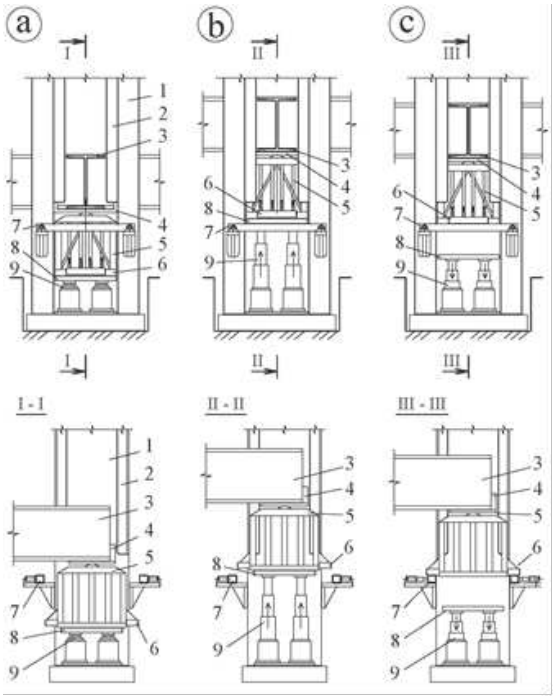

Figure 3. *Coating lift cycle phases, with support on the growing installation columns*: **a)** transfer of load from the coating to the lifting module, **b)** lifting the coating with support on the tops of the installation columns, **c)** transfer of load from the coating to the lifting fixators, 1 – frame column, 2 – guiding profile, 3 – coating beam, 4 – support frame, 5 – top of the installation column, 6 – cantilever protrusion of the installation column top, 7 – lifting fixator beam, 8 – lifting module support platform, 9 – jack of the lifting module

The successive stages of the coating beam lift cycle, with support on the tops of the rising installation columns, include the following operations:

Phase 1: "Transfer of load from the coating to the lifting module".

Initially, during the assembly of the coating on scaffolding, support frames are secured under the load-bearing beams of the coating. The coating beams and support frames are positioned between the paired columns of the load-bearing frame and lowered onto the tops of the growing installation columns, which are placed on the lifting modules support platforms. The support platforms are connected to the hydraulic jack rods of the lifting modules, which are positioned on the foundations between the load-bearing frame's paired columns. As a result, the structural parts of the raised coating, the tops of the installation columns, and the support platforms pass their load to the lifting modules' hydraulic jacks.

Phase 2: "Lifting the coating with support on the tops of the installation columns"

When the working fluid is fed into the hydraulic jacks, the lifting modules' support platforms, the tops of the installation columns, and the coating structures are pushed (lifted) to a height equal to the stroke length of the hydraulic jack rods. As the coating's support frames and load-bearing beams travel across the area between the paired frame columns, the columns serve as guides, minimizing horizontal deviations of the raised coating. To maintain vertical alignment when lifting the installation column sections, guide profiles are attached to the inside surfaces of the paired frame columns. The hydraulic jack rods continue pushing until the cantilevered projections of the installation column tops exceed the height of the lift lock mechanisms, which are linked to the paired columns' exterior surfaces. Throughout this operation, the lift lock beams stay in their original position, ensuring that they do not hinder

the upward movement of the installation column tops' cantilevered projections beyond the height of the lift lock beams.

Phase 3: "Transferring the load from the coating to the lift locks"

After raising the tops of the installation columns to a level where their cantilevered projections are above the lift lock beams, working fluid is supplied to the lift lock hydraulic cylinders. This allows the lift lock beams to move under the cantilevered projections of the installation column tops. Within the subsequent step, the hydraulic jacks rods in the lifting modules move the support platforms with the installation column tops downward until the cantilevered projections of the installation column tops rest on the lift lock beams. In this way, the load from the coating structure is transferred through the cantilevered projections of the installation column tops to the lift lock beams. The now load-free support platforms are moved back to their initial position, towards the hydraulic jack bodies of the lifting module. After this, the next sections of the installation column are supplied to the support platforms of the lifting module for the continuation of the growing up process.

The method of building large-span coatings using the established approach includes three successive organizational and technological steps.

"Pre-lifting stage"

Using the free lifting method with self-propelled boom cranes, foundation cups, paired columns, intercolumn beams, and ties are installed. The lifting modules' components, notably hydraulic jacks and support platforms, are positioned on the foundations between the paired columns. The installation columns' tops rest on the support platforms. Lift locks, which consist of load-bearing cantilevered platforms with hydraulic cylinders and movable beams, are attached to the external surfaces of the paired frame columns. The coating is assembled on low scaffolding, during which the support frames are fixed under the load-bearing beams of the coatings. During the assembly process, the load-bearing beams and support frames are brought into the space between the paired frame columns and lowered onto the tops of the installation columns. After installing the mechanized process equipment provided in the coating structure and forming all roofing layers, the structurally and technologically complete block is 100% ready to be lifted to the design height.

"Lifting stage"

The load-bearing beams of the coating are lifted between the paired frame columns in a cyclic, step-by-step process. The height of each lifting step is equivalent to the working stroke length of the hydraulic jack pistons, which push up the sections of the growing installation columns, the support frames, and the load-bearing beams of the coating. When the process of lifting is ongoing, the load from the growing columns and coating structures is alternately transferred to the support platforms of the lifting modules and the beams of the lift locks. Once the load-bearing beams of the coating have been raised to the design height, the support frames of the coating are finally secured between the tops of the paired frame columns. The unloaded parts of the installation columns are then disassembled.

"Post-lifting stage"

Dismantling of the installation columns' sections takes place in the foundation space. During deconstruction, the load from the installation column sections is alternatively transmitted to the lifting module support platforms and lift lock beams. After disassembling all portions of the installation columns, the lifting modules and lift locks are removed from the installation location.

Figure 4 depicts the sequence of erection of the coating block with support frames and beams resting on the heads of the growing installation columns.

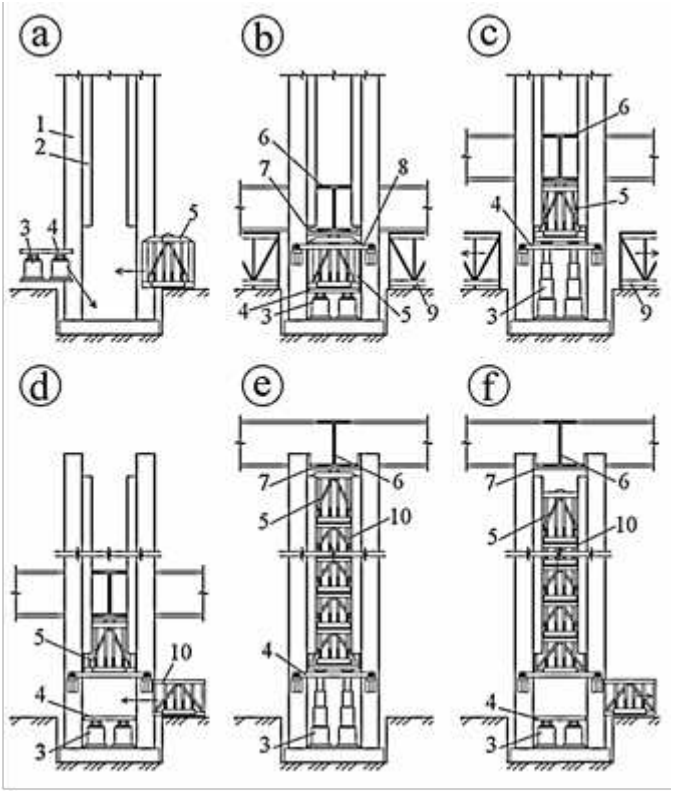

Figure. 4. *Sequence of the coating block erection, with the support frames and beams resting on the heads of the growing installation columns*: a, b – pre-lifting phase, c, d, e – lifting phase, f – post-lifting phase, 1 – frame column, 2 – guide profile, 3 – hydraulic jack, 4 – support platform, 5 – head of the growing installation column, 6 – coating beam, 7 – support frame, 8 – lifting fixture beam, 9 – scaffolding, 10 – second section of the growing installation column

The developed technological solution enables carrying out the whole process of assembling large-span coatings into structural-technological blocks at the foundation level and subsequently moving these coating blocks to the design height using lifting modules, even within the constraints of a densely built-up area. The construction site required does not exceed the plan dimensions of the large-span coating being erected. Furthermore, the new method minimizes the amount of high-altitude installation labor to just fastening the coated beams at the design height between the heads of paired columns of the supporting frame. The reduction in the number of installation operations shortens the overall timeframe for erecting large-span coatings. All processes of growing the installation columns and moving the coating's support beams from the foundation level to the heads of the paired columns are automated. Operators carry out managing the process of erection using lifting modules from outside the lifting work zone.

5. CONCLUSION

Considering the advantages of known methods for lifting coatings through pulling and pushing, a new organizational and technological solution for the erection of large-span coatings with the use of lifting modules has been designed. This solution implies that the vertical movement of coatings to the design height is carried out by supporting the coating's load-bearing beams between paired columns of the supporting frame onto the heads of the growing

installation columns. During column growth, the load from the sections of the installation columns and the rising coating is alternately accepted by the hydraulic jacks of the lifting module, located on the foundations between the frame's paired columns, and the lifting beam retainers attached to the external surfaces of the paired columns.

All processes for growing the installation column sections and moving the coating beams between the paired columns of the frame from the foundation level to the design height are automated. The reduction of high-altitude work to just the final securing of the coating beams between the column heads shortens the overall lifting work time. The developed technology allows the entire coating erection process to be carried out in densely built-up areas on sites whose dimensions do not exceed those of the large-span coating being lifted.

The organizational and technological principles of this solution can also be applied when developing technological schemes for lifting large and heavy mechanized process equipment in industrial workshops, where the use of traditional crane technology is not feasible. The proposed technique, which improves the load-bearing qualities of the paired columns, may be utilized to elevate structural and technical roofing blocks to heights exceeding 34 meters.

REFERENCES

Bondar, O., Petrenko, G., Khalilov, A., & Vahonova, O. (2022) Construction project management based on the circular economy. *IJCSNS. International Journal of Computer Science and Network Security,* 22(9), 630-635. DOI: 10.22937/IJCSNS.2022.22.9.82

Chernenko, V., & Sobko, Yu. (2016). Research of the main technological indicators influencing crane-less methods of lifting of structural coverings. *New Technologies in Construction, 36*, 50-55, (in Ukrainian). http://www.ntinbuilding.ndibv.org.ua/archive/2016/31/9.pdf

Chernenko, V. (1982). *Methods of building structure installation*. Kyiv: Budivelnik.

Chernenko, V., Osypov, O., Tonkacheiev, H., & Romanushko, Ye. (2011). *Technology of installation of building structures*. Kyiv: Horobets.

Chernenko, K. (2011). History and prospects of buildings and structures of large surfaces. *Construction Engineering, 27,* 36-41. https://repositary.knuba.edu.ua/server/api/core/bitstreams/9ecc4582-7558-4aef-a3c0-b0130b049e40/content

DLT Engineering. (2011). BHEL Western Division 370-ton capacity stand jack system. *DLT Engineering Reference Project.* https://www.dlteng.com/en/projects/BHEL_western.htm

ENERPAC (2022). The Jack-Up System with a lifting capacity of 2,000 metric tons (500 tons per unit). https://www.enerpac.com/en-us/jack-up-systems/USJackupSystems

Engel, H. (2007). *TPG Systeme*. Astel: Verlag Gerd Hatje.

FAGOLI Asotech. (2024). Innovative software and hardware for lifting systems with hydraulic Stand Jacks. https://www.asotech.com/en/portfolio/innovative-software-for-lifting-equipment/

Fligier, K., & Rowinski, L. (1977). *Montaz zintegrowanych konstrukcji budowlanych*. Warszawa: Pansnwowe Wydawnictwo naukowe.

Ibrahim, A. (2024). Contemporary architecture styles: evidence of enriched societal intellectual architecture. *Cadernos de Educação Tecnologia e Sociedade, 17*(3). https://doi.org/10.14571/brajets.v17.nse3.174-199

Ignatenko, O., & Glushchenko, I. (1992). Development of coating erection technology with used of hydraulic lifting equipment. *Industrial Construction and Engineering Structure, 1*(1), 26-27.

MAMMOET (2021). Stand jack lifts, slide, support and transfer large and heavy loads along straight line. https://www.mammoet.com/resources/piet-explains-strand-jacks/

Nazarenko, V., Sytnik, N., & Nikolaev, V. (1986). Hydraulic lifting installations on mounting of large-span structures. *Installation and Special Works in Construction, 5*(1), 15-20.

Osipov, O., & Chernenko, K. (2020). Information Model of the Process of Lifting Long Span Roof. *Science Innovation, 16*(4), 3-10. https://doi.org/10.15407/scine16.04.003

Ruan, R., Lai, M., & Lin, Y. (2023). Integral Lifting of Steel Structure Corridor between Two Super High-Rise Building under Wind Load. *Buildings, 13*, 2441. https://doi.org/10.3390/buildings13102441

Rühle, H., Kühn, E., & Weissbach, K. (1989). *Priestorové strešné konštrukcie*. Bratislava: Vydavateľstvo ALFA.

SARENS GROUP (2024). Direct Industry. Innovative solutions for hydraulic lifting system. https://www.directindustry.com/

Sobhanian, R., Sabouri, J., & Dabiri, R. (2024). Optimal parameter design of multiple tuned mass damper for tall buildings using multi-objective particle swarm optimization algorithm considering soil-structure interaction effects. Cadernos de Educação Tecnologia e Sociedade, 17(3). https://doi.org/10.14571/brajets.v17.nse3.216-230

Sobko, Yu. & Novak, Ye., (2015). Research of methods of raising large-scale structural coverings of one-story industrial buildings. *Modern Technologies and Methods of Calculations in Construction, 3*, 157-162. https://eforum.lntu.edu.ua/index.php/construction/issue/view/18

Sobko, Yu., & Novak, Ye. (2022). Selection of factors affecting the labor-intensiveness of the process of installation of structural plates covering single-story building. *Current Problems of Architecture and Urban Planning, 64*, 343-350. https://doi.org/10.32347/2077-3455.2022.64.343-350

Tonkacheiev, H., Rashkivskyi, V., & Dubovyk, I. (2023). Investigations of labor intensity and duration of the assembly processes of structural covering blocks. *Strength of Materials and Theory of Structures, 110*, 393-403. https://doi.org/10.32347/2410-2547.2023.110.393-403

Tonkacheiev, H., Rashkivskyi, V., & Sobko Yu. (2022). Prerequisites for the creation of lifting and collecting technological modules for the installation of structural blocks of the coating. *AD ALTA, 12*/01/XXVII, 204-206. http://www.magnanimitas.cz/ADALTA/120127/papers/J_05.pdf

ULTRACON (2022). The Stand Lifting Units (SLU). Integrated Business Park Development. Singapore. https://utracon.com/ucplwp/index.php/the-strand-lifting-unit-slu/

Yang, Y., Du, H., & Men, W. (2023). Time -Varying Mechanical Analysis of Long-Span Special Steel Structures Integral Lifting in Construction Basing Building Information Model. *Sustainability, 15*, 11256. https://doi.org/10.3390/su15411256

Ziólko, J., Orlik, G., & Montaž, G. (1980). *Konstrukcjí stalowych*, Warszawa: Arcady.